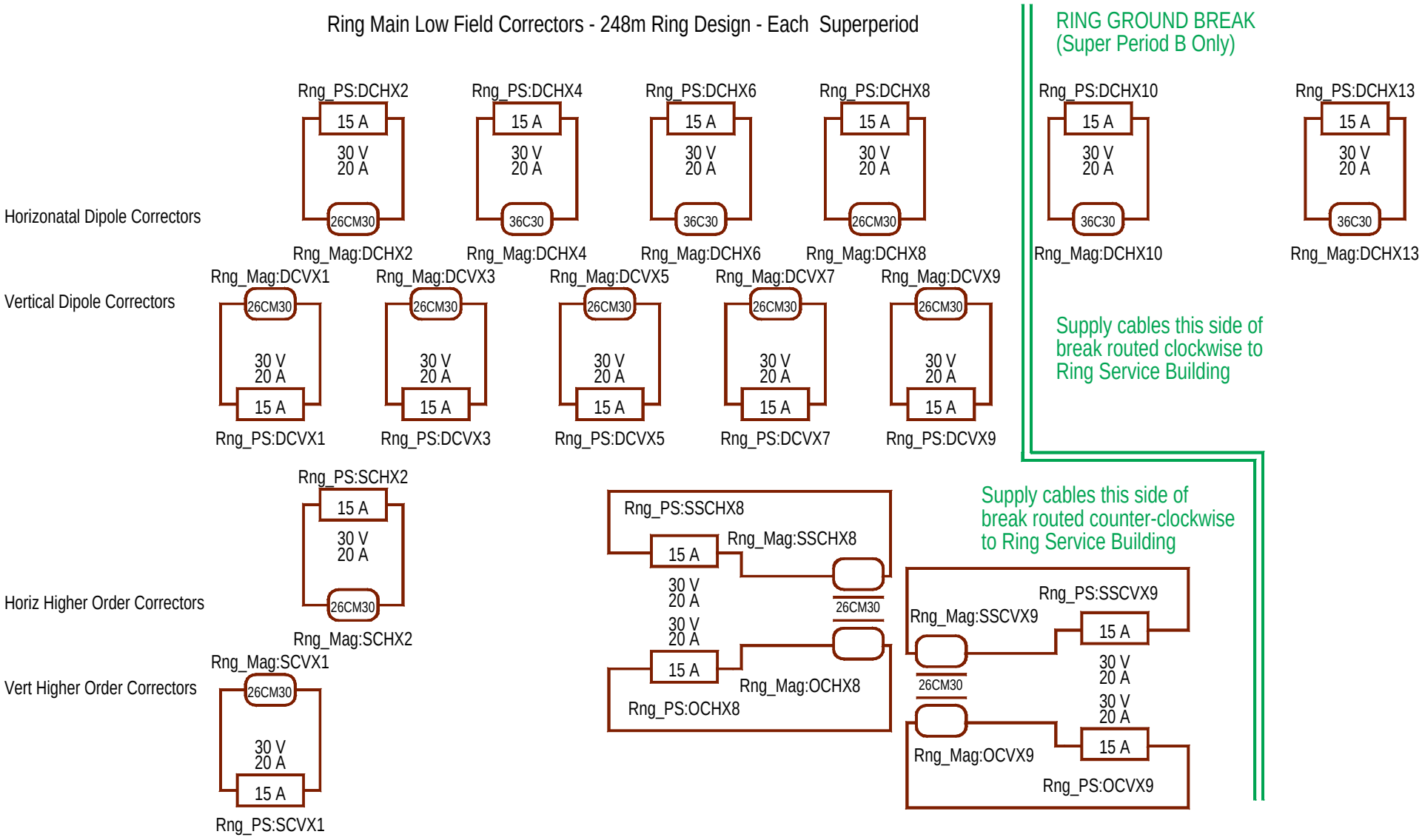
Ring Main Low Field Correctors - 248m Ring Design - Each Superperiod
RING GROUND BREAK
(Super Period B Only)
Horizonatal Dipole Correctors
Rng_PS:DCHX2
15 A
30 V
20 A
26CM30
Rng_Mag:DCHX2
Rng_PS:DCHX4
15 A
30 V
20 A
36C30
Rng_Mag:DCHX4
Rng_PS:DCHX6
15 A
30 V
20 A
36C30
Rng_Mag:DCHX6
Rng_PS:DCHX8
15 A
30 V
20 A
26CM30
Rng_Mag:DCHX8
Rng_PS:DCHX10
15 A
30 V
20 A
36C30
Rng_Mag:DCHX10
Rng_PS:DCHX13
15 A
30 V
20 A
36C30
Rng_Mag:DCHX13
Vertical Dipole Correctors
Rng_Mag:DCVX1
26CM30
30 V
20 A
15 A
Rng_PS:DCVX1
Rng_Mag:DCVX3
26CM30
30 V
20 A
15 A
Rng_PS:DCVX3
Rng_Mag:DCVX5
26CM30
30 V
20 A
15 A
Rng_PS:DCVX5
Rng_Mag:DCVX7
26CM30
30 V
20 A
15 A
Rng_PS:DCVX7
Rng_Mag:DCVX9
26CM30
30 V
20 A
15 A
Rng_PS:DCVX9
Supply cables this side of
break routed clockwise to
Ring Service Building
Horiz Higher Order Correctors
Rng_PS:SCHX2
15 A
30 V
20 A
26CM30
Rng_Mag:SCHX2
Vert Higher Order Correctors
Rng_Mag:SCVX1
26CM30
30 V
20 A
15 A
Rng_PS:SCVX1
Rng_PS:SSCHX8
15 A
Rng_Mag:SSCHX8
30 V
20 A
26CM30
30 V
20 A
15 A
Rng_Mag:OCHX8
Rng_PS:OCHX8
Supply cables this side of
break routed counter-clockwise
to Ring Service Building
Rng_PS:SSCVX9
Rng_Mag:SSCVX9
15 A
30 V
20 A
26CM30
30 V
20 A
Rng_Mag:OCVX9
15 A
Rng_PS:OCVX9