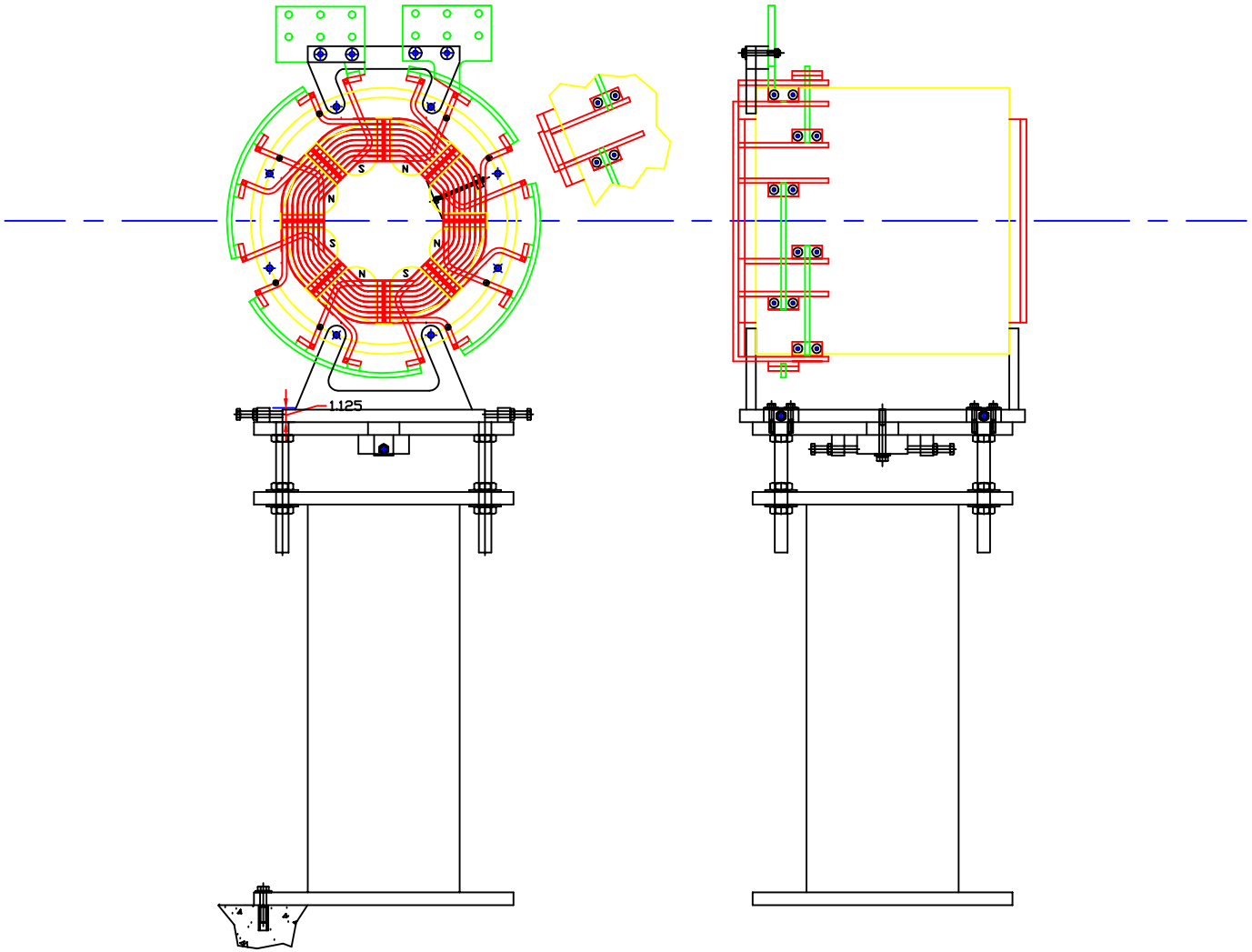
S
N
N
S
N
S
N
S
1.125